enviro-dynamics

environmental solutions for a changing world

Environmental Management Plan

For proposed development at 47 Youngs Road, Apollo Bay, v1.1

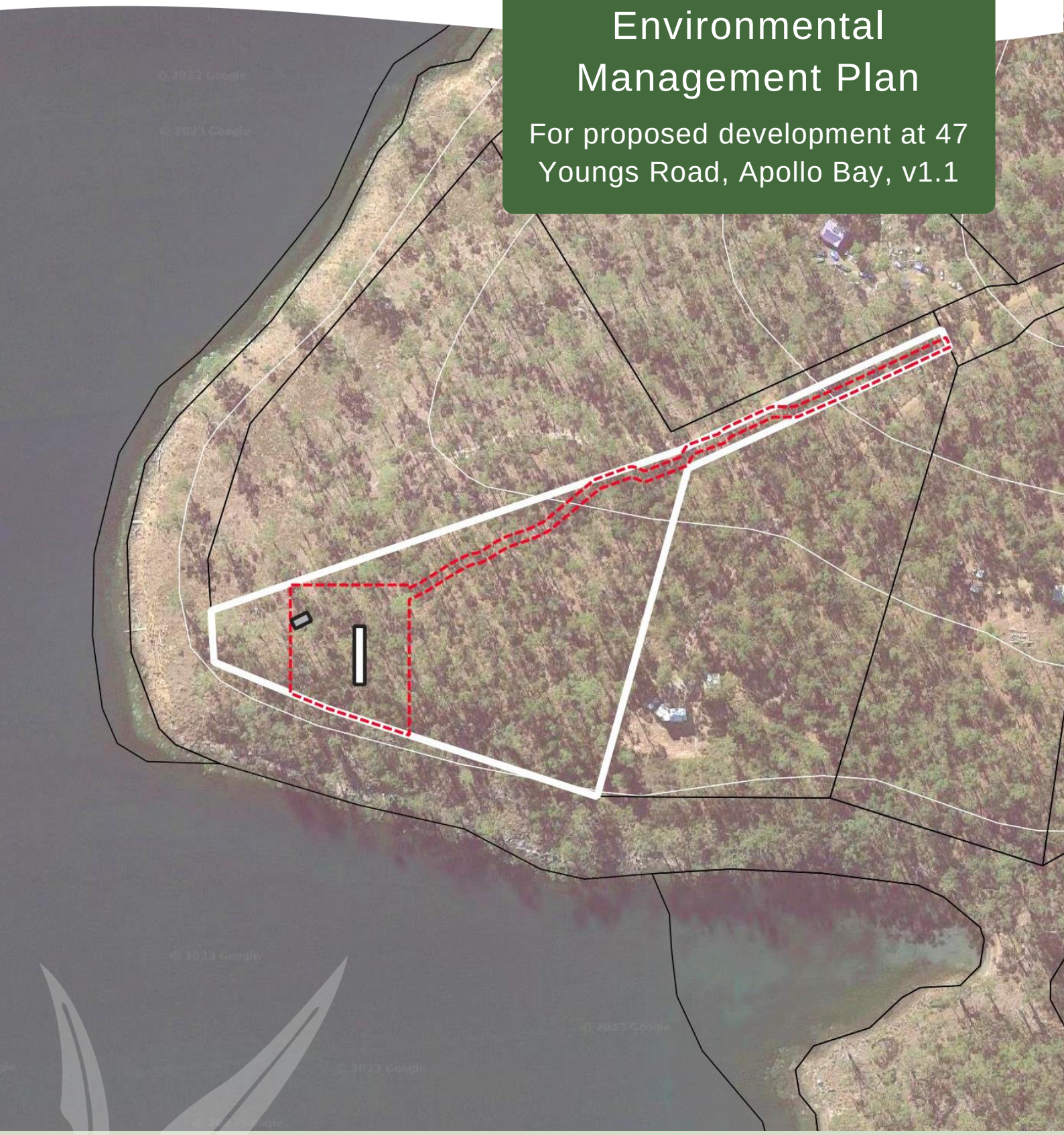

Client: Dane Taylor

Prepared by: Jim Mulcahy (BSc, GradDipEnvSt)

Date: March 2023

Contents

1. Introduction

This Environmental Management Plan (EMP) has been developed in relation to a proposed new habitable building to be used for visitor accommodation at 47 Youngs Road, Apollo Bay (CT 144772/814). Kingborough Council have requested additional information to assess the proposal and this EMP has been commissioned by the proponent to address elements of the Council requests.

The subject land is +/- 2.32 ha in a single title located on Kinghorne Point at Apollo Bay. It overlooks the D'Entrecasteaux Channel, with Woodbridge approximately 3 km away across the channel to the west (Figure 1). It currently contains no built infrastructure.

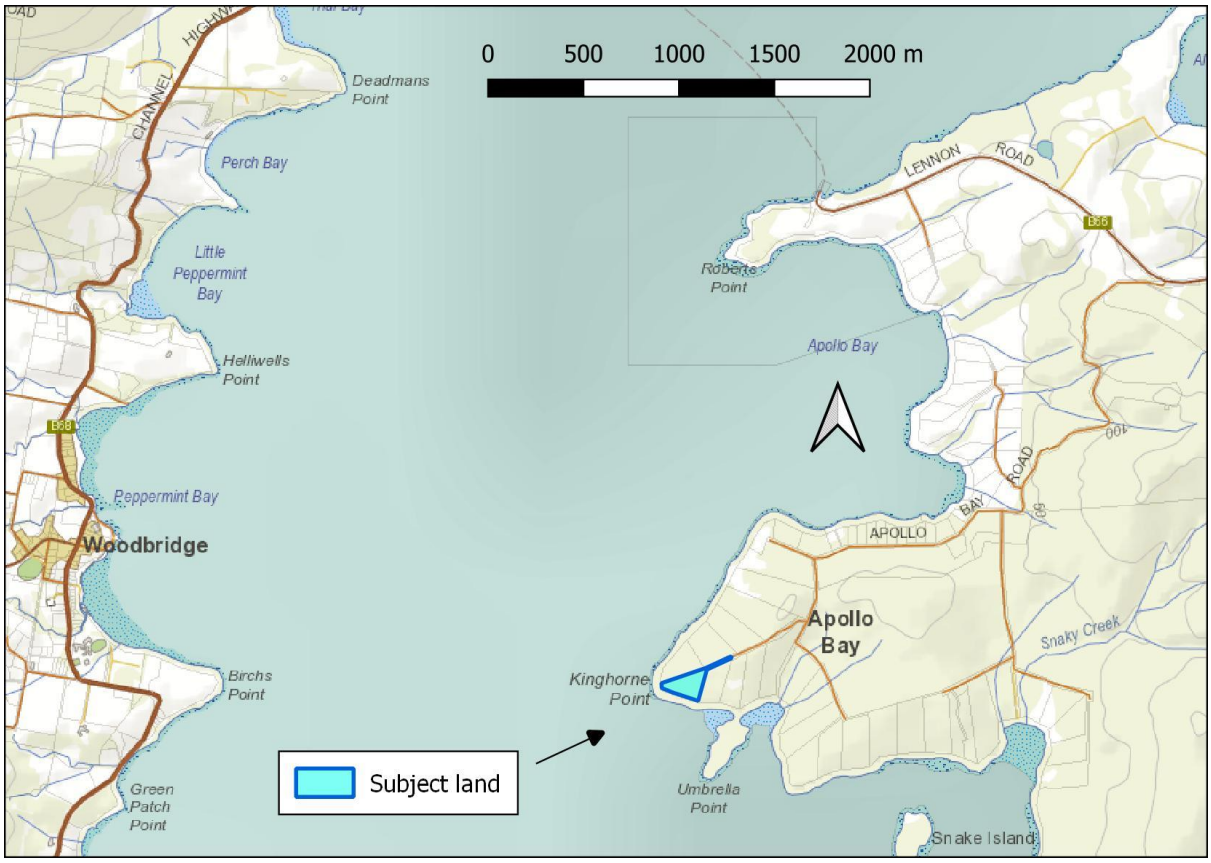

Figure 1 – Location of the subject land

The subject land is bound to the south by the Snake Bay Conservation Area and to the north and east-southeast by private titles. The property to the north (48 Youngs Road) is currently undeveloped except for a gravel access. The property to east-southeast (45 Youngs Road) contains a single residential dwelling and gravel access.

Both the subject land and the adjoining property to the north (48 Youngs Road) are accessed from Youngs Road via long access strips 10 m wide. The two adjoining access strips are subject to reciprocal Right of Ways creating the potential for shared access within

the combined 20 m wide corridor. There is a rough vehicle track within the access strip to the 48 Youngs Road but currently no formed tracks within the boundaries of the subject land.

The site has a westerly aspect and is topographically simple, with an altitudinal range of approximately 10-15 m above sea level. There are no water course or drainage features present, but there are isolated areas of poor drainage, as indicated by localised floristic composition.

The site and surrounds support relatively uniform and homogenous dry sclerophyll forest generally dominated by blue gum (*Eucalyptus globulus*) with an understorey typically dominated by sedges, particularly sags (*Lomandra longifolia*), and low shrubs. Minor, localised variations in the composition of the understorey reflect subtle differences in aspect, slope and drainage, which also result in localised occurrence of stringybark (*Eucalyptus obliqua*) and black gum (*Eucalyptus ovata*) in the canopy (ECOTAS, July 2022).

2. Development proposal

The property is subject to a current development application for a new habitable building to be used for visitor accommodation (DA-2022-473). Updated site-plans have been prepared in response to requests for additional information from Council and are shown at Figure 2 and Figure 3 (Room 11 Architects, March 2023).

It is proposed that the visitor accommodation unit and outbuilding be accessed via a new gravel driveway. The first section of the driveway is proposed to be constructed within the access strip to the property. Thereafter, the driveway winds through the forest to avoid or minimise impacts on mature trees.

Justin Cashion (BFP 112) of Ground Proof Mapping (GPM) has prepared a Bushfire Hazard Report in support of the proposal. This report classifies the proposed habitable building as a Class 1b structure. Because visitor accommodation is considered to create increased vulnerability to occupants, this a Class 1b building invokes additional bushfire hazard responses under Table 4.4 Element D of the Director of Building Control's Determination – Requirements for Building in Bushfire Prone Areas (transitional) v2.2, 2020 (Director's Determination), as summarised below.

A new Class 1b building must:

(a) Be

- (i) located on the lot so as to be provided with HMAs no smaller than the separation distances required for BAL 12.5, or
- (ii) provided with a certificate from an accredited person that a bushfire hazard management plan provides, to the degree necessary, separation of the

building from the bushfire hazard, appropriate resistance to ignition from bushfire, property access and water supply for firefighting, and

(b) Have a hazard management area (HMA) established in accordance with a certified bushfire hazard management plan.

The BHMP certified by GPM (GPM, March 2023) establishes an HMA with BAL-12.5 separation distances to the west, north and east and a BAL-29 separation distance to the south (coastal reserve). The area of the HMA captures the location of proposed built infrastructure and the proposed parking/turning areas at the termination of the property access.

A detailed Natural Values Assessment of the site has been conducted by Mr Mark Wapstra of ECOTAS (ECOTAS, July 2022). Detailed assessment and accurate location of individual trees has also been conducted by Mark Wapstra in association with Leary, Cox and Cripps Surveyors. Subsequently this tree data has been refined in response to the requests for additional information from Council. The tree data has been presented in great detail in the Architectural Drawings submitted by the proponent and is included in Figure 2 and Figure 3 (Room 11 Architects, March 2023).

In response to the requests from Council, the proponent has engaged Consulting Arborist Joe Loorham of Tree Pioneers to provide a detailed Arborist Assessment of trees proposed to be retained that have greater than 10% of their Tree Protection Zones impacted by proposed works (Tree Pioneers, March 2023).

3. Scope

The requests for additional information (RAI) from Council applicable to this EMP are summarised below.

Please provide an environmental management plan (EMP) for each location by a suitably qualified person addressing the Scheme requirements. At a minimum, measures should include:

(i) tree protection,

(ii) vehicle hygiene during construction,

(iii) weed management (for widespread infestations of *Erica lusitanica* - Spanish Health and isolated patches of *Senecio jacobaea* – Ragwort),

(iv) a site plan showing the extent of native vegetation (m^2) to be impacted by construction, bushfire hazard management and access requirements as recommended in the Natural Values Assessment (ECOtas, 5th July 2022),

(v) ** …

(vi) ongoing retention and maintenance of existing native vegetation outside the area of the proposed works, including retention and protection of remaining native vegetation and individual trees outside the construction and access footprint and bushfire hazard management area under a Part 5 Agreement, and

(vii) mitigation measures to minimise swift parrot collision risk. It is acknowledged that a reference to GL02 (glazing with low reflectivity value < 0.45) is noted in the legend in the plans, however all large windows in both the studio and dwelling are referenced with GL01 glass that has an unspecified reflectivity rating. Please specify that all windows > 2 m^2 will be glazed with GL02.

** This EMP does not address Item 7(v) of the RAI, which invites a revisitation of prescribed hazard management areas. A certified BHMP has been provided by an accredited practitioner which responds appropriately to the requirements of the Director's Determination for the identified building class (1b). Any amendments to this certified bushfire hazard response are at the discretion of the practitioner concerned.

The existing data and documentation from Room 11 Architects (March 2023), GPM (March 2023), ECOTAS (July 2022) and Tree Pioneers (March 2023) have provided the technical reference sources for preparation of this EMP. The EMP relates to the entire property. The plan provides management prescriptions and advice which aims to maintain native vegetation and associated habitat in good condition and to prevent any deleterious impacts on native vegetation from the use and management of adjoining land (such as weed invasion).

4. Disclaimer

The advice and conclusions in this plan rely upon the location of proposed infrastructure relative to property boundaries and individual trees. Locations of proposed infrastructure relative to boundaries and natural features rely upon the plans and reports provided by the client. The accuracy of these reference sources cannot be guaranteed by this author. Where this plan indicates that trees are to be retained, it is assumed that this can be achieved within the constraints of the site.

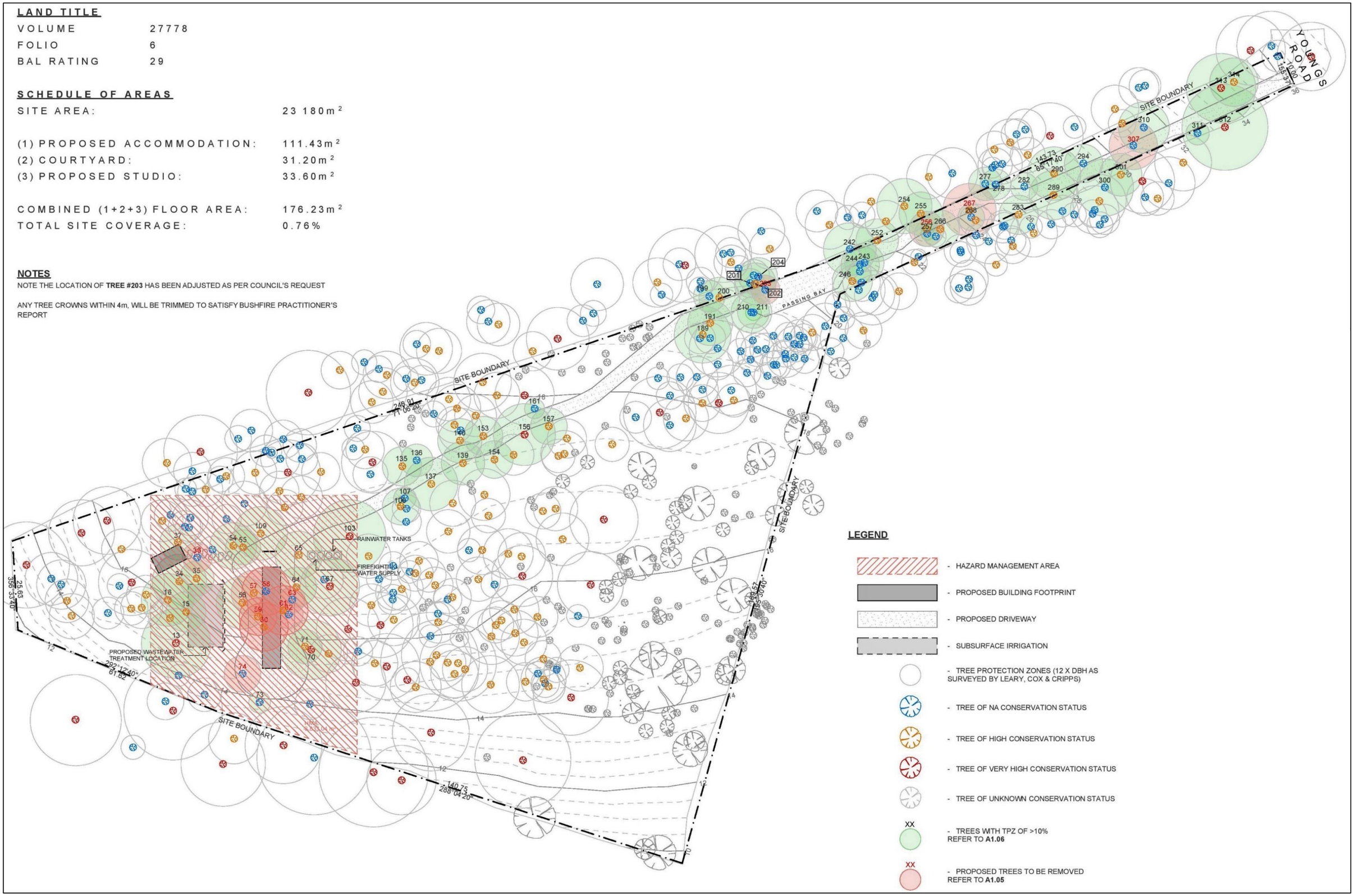

Figure 2 – Site-plan showing conservation status of trees (cropped from page 8 of Architectural Plans by Room11 Architects, March 2023)

TABLE OF TREES PROPOSED TO BE REMOVED

NO.	SPECIES	DBHOB (CM)	NOTES	CONSERVATION STATUS	RATIONALE	JUSTIFICATION FOR REMOVAL
36	EUCALYPTUS GLOBULUS	36		NA (SEE RATIONALE)	E.GLOBULUS<40CM DBH	PROPOSED ACCOMMODATION
57	EUCALYPTUS GLOBULUS	54		HIGH	E.GLOBULUS>40<70CM DBH	PROPOSED DRIVEWAY
58	DEAD	32	STUMP, 3M, UNKNOWN SPECIES	NA (SEE RATIONALE)	STAGS & STUMPS IMPORTANT FOR 40-SPOTTED PARDALOTE	PROPOSED ACCOMMODATION
59	EUCALYPTUS GLOBULUS	45		HIGH	E.GLOBULUS>40<70CM DBH	PROPOSED DRIVEWAY
60	EUCALYPTUS GLOBULUS	58		HIGH	E.GLOBULUS>40<70CM DBH	PROPOSED ACCOMMODATION
61	EUCALYPTUS GLOBULUS	59		HIGH	E.GLOBULUS>40<70CM DBH	PROPOSED DRIVEWAY
62	EUCALYPTUS GLOBULUS	34		NA (SEE RATIONALE)	E.GLOBULUS<40CM DBH	PROPOSED DRIVEWAY
63	EUCALYPTUS GLOBULUS	31		NA (SEE RATIONALE)	E.GLOBULUS<40CM DBH	PROPOSED DRIVEWAY
74	E. PULCHELLA	44		NA (SEE RATIONALE)	DRY FOREST, <70CM DBH	PROPOSED DRIVEWAY
203	E. OBLIQUA	35		HIGH	DRY FOREST, <70CM DBH	PROPOSED DRIVEWAY
256	EUCALYPTUS GLOBULUS	42		HIGH	E.GLOBULUS>40<70CM DBH	PROPOSED DRIVEWAY
267	EUCALYPTUS GLOBULUS	64		HIGH	E.GLOBULUS>40<70CM DBH	PROPOSED DRIVEWAY
307	E. PULCHELLA	58		NA (SEE RATIONALE)	DRY FOREST, <70CM DBH	PROPOSED DRIVEWAY

TABLE OF TREES WITH MORE THAN 10% OF TPZ AFFECTED

NO.	SPECIES	DBHOB (CM)	NOTES	CONSERVATION STATUS	RATIONALE	AREA OF TPZ (SQM)	AREA ENCROACHED (SQM)	TPZ ENCROACHMENT (%)	TPZ ENCROACHMENT ZONE
13	E. PULCHELLA	83		VERY HIGH	DRY FOREST, ANY SPECIES >70CM DBH	311.65	88.69	28.46%	PROPOSED WASTEWATER TREATMENT
15	EUCALYPTUS GLOBULUS	48		HIGH	E.GLOBULUS>40<70CM DBH	104.23	44.99	43.16%	PROPOSED WASTEWATER TREATMENT
16	EUCALYPTUS GLOBULUS	63		HIGH	E.GLOBULUS>40<70CM DBH	179.55	56.06	31.22%	PROPOSED WASTEWATER TREATMENT
34	EUCALYPTUS GLOBULUS	65		HIGH	E.GLOBULUS>40<70CM DBH	191.13	26.57	13.90%	PROPOSED STUDIO & W.W.T
35	EUCALYPTUS GLOBULUS	42		HIGH	E.GLOBULUS>40<70CM DBH	79.8	23.58	29.55%	PROPOSED WASTEWATER TREATMENT
36	EUCALYPTUS GLOBULUS	36		NA (SEE RATIONALE)	E.GLOBULUS>40<70CM DBH	58.63	23.68	40.39%	PROPOSED DRIVEWAY
37	EUCALYPTUS GLOBULUS	43		HIGH	E.GLOBULUS>40<70CM DBH	83.65	31.97	38.22%	PROPOSED STUDIO
54	EUCALYPTUS GLOBULUS	56		HIGH	E.GLOBULUS>40<70CM DBH	141.87	51.43	36.25%	PROPOSED DRIVEWAY
55	EUCALYPTUS GLOBULUS	42		HIGH	E.GLOBULUS>40<70CM DBH	79.8	33.95	42.54%	PROPOSED DRIVEWAY
56	EUCALYPTUS GLOBULUS	63		HIGH	E.GLOBULUS>40<70CM DBH	179.55	68.15	37.96%	PROPOSED ACCOMMODATION & W.W.T
64	EUCALYPTUS GLOBULUS	48		HIGH	E.GLOBULUS>40<70CM DBH	104.23	45.55	43.70%	PROPOSED ACC. & WATER TANKS
65	EUCALYPTUS GLOBULUS	57		HIGH	E.GLOBULUS>40<70CM DBH	146.98	56.61	38.52%	PROPOSED DRIVEWAY
67	EUCALYPTUS GLOBULUS	71		VERY HIGH	DRY FOREST, ANY SPECIES >70CM DBH & E. GLOBULUS >70CM DBH	228.05	90.98	39.89%	PROPOSED WATER TANKS
70	EUCALYPTUS GLOBULUS	75		VERY HIGH	DRY FOREST, ANY SPECIES >70CM DBH & E. GLOBULUS >70CM DBH	234.52	79.74	34.00%	PROPOSED DRIVEWAY
71	EUCALYPTUS GLOBULUS	41		HIGH	E.GLOBULUS>40<70CM DBH	78.05	27.54	36.21%	PROPOSED DRIVEWAY
103	E. PULCHELLA	87		VERY HIGH	DRY FOREST, ANY SPECIES >70CM DBH & E. GLOBULUS >70CM DBH	342.41	90.49	26.43%	PROPOSED DRIVEWAY
106	EUCALYPTUS GLOBULUS	44		HIGH	E.GLOBULUS>40<70CM DBH	87.58	20.42	23.32%	PROPOSED DRIVEWAY
107	EUCALYPTUS GLOBULUS	27		NA (SEE RATIONALE)	E.GLOBULUS<40 DBH	32.98	10.67	32.35%	PROPOSED DRIVEWAY
109	EUCALYPTUS GLOBULUS	64		HIGH	E.GLOBULUS>40<70CM DBH	185.3	67.65	36.51%	PROPOSED DRIVEWAY
135	EUCALYPTUS GLOBULUS	47		HIGH	E.GLOBULUS>40<70CM DBH	99.93	16.75	16.76%	PROPOSED DRIVEWAY
136	EUCALYPTUS GLOBULUS	39		NA (SEE RATIONALE)	E.GLOBULUS<40 DBH	68.81	13.47	19.58%	PROPOSED DRIVEWAY
137	EUCALYPTUS GLOBULUS	64		HIGH	E.GLOBULUS>40<70CM DBH	185.3	70.84	38.23%	PROPOSED DRIVEWAY
139	EUCALYPTUS GLOBULUS	52		HIGH	E.GLOBULUS>40<70CM DBH	122.33	53.05	43.37%	PROPOSED DRIVEWAY
140	EUCALYPTUS GLOBULUS	53		HIGH	E.GLOBULUS>40<70CM DBH	127.08	45.18	35.55%	PROPOSED DRIVEWAY
153	EUCALYPTUS GLOBULUS	47		HIGH	E.GLOBULUS>40<70CM DBH	99.93	40.88	40.91%	PROPOSED DRIVEWAY
154	EUCALYPTUS GLOBULUS	45		HIGH	E.GLOBULUS>40<70CM DBH	91.61	20.26	22.12%	PROPOSED DRIVEWAY
156	EUCALYPTUS GLOBULUS	74		VERY HIGH	DRY FOREST, ANY SPECIES >70CM DBH & E. GLOBULUS >70CM DBH	247.73	106.95	43.17%	PROPOSED DRIVEWAY
157	EUCALYPTUS GLOBULUS	44		HIGH	E.GLOBULUS>40<70CM DBH	87.58	31.71	36.21%	PROPOSED DRIVEWAY
161	DEAD	24		NA (SEE RATIONALE)	STAGS & STUMPS IMPORTANT FOR 40-SPOTTED PARDALOTE	26.06	8.74	33.54%	PROPOSED DRIVEWAY
189	EUCALYPTUS GLOBULUS	68		HIGH	E.GLOBULUS>40<70CM DBH	209.18	52.59	25.14%	PROPOSED DRIVEWAY
191	EUCALYPTUS GLOBULUS	54		HIGH	E.GLOBULUS>40<70CM DBH	131.92	54.79	41.53%	PROPOSED DRIVEWAY
199	E. PULCHELLA	38		NA (SEE RATIONALE)	DRY FOREST, <70CM DBH	65.33	13.13	20.10%	PROPOSED DRIVEWAY
200	EUCALYPTUS GLOBULUS	49		HIGH	E.GLOBULUS>40<70CM DBH	106.62	44.5	40.97%	PROPOSED DRIVEWAY
201	E. OBLIQUA	35		NA (SEE RATIONALE)	DRY FOREST, <70CM DBH	55.42	12.94	23.35%	PROPOSED DRIVEWAY
202	EUCALYPTUS GLOBULUS	50		HIGH	E.GLOBULUS>40<70CM DBH	113.1	42.8	37.84%	PROPOSED DRIVEWAY
203	E. OBLIQUA	35		NA (SEE RATIONALE)	DRY FOREST, <70CM DBH	55.42	15.74	82.40%	PROPOSED DRIVEWAY
204	E. OBLIQUA	46		NA (SEE RATIONALE)	DRY FOREST, <70CM DBH	95.73	18.95	19.80%	PROPOSED DRIVEWAY
210	E. OBLIQUA	49		NA (SEE RATIONALE)	DRY FOREST, <70CM DBH	108.62	49.19	45.29%	PROPOSED DRIVEWAY
211	EUCALYPTUS GLOBULUS	38		NA (SEE RATIONALE)	E.GLOBULUS<40 DBH	65.33	30.29	46.36%	PROPOSED DRIVEWAY
242	DEAD	63	STUMP, 10M, UNKNOWN SPECIES	NA (SEE RATIONALE)	STAGS & STUMPS IMPORTANT FOR 40-SPOTTED PARDALOTE	179.55	75.36	41.97%	PROPOSED DRIVEWAY
243	DEAD	47	STUMP, 9M, EX.-E. GLOBULUS	NA (SEE RATIONALE)	STAGS & STUMPS IMPORTANT FOR 40-SPOTTED PARDALOTE	99.93	49.29	49.32%	PROPOSED DRIVEWAY
244	E. OBLIQUA	46		NA (SEE RATIONALE)	DRY FOREST, <70CM DBH	95.73	47.4	49.51%	PROPOSED DRIVEWAY
246	EUCALYPTUS GLOBULUS	48		HIGH	DRY FOREST, <70CM DBH	104.23	23.93	22.96%	PROPOSED DRIVEWAY
252	EUCALYPTUS GLOBULUS	50		HIGH	E.GLOBULUS>40<70CM DBH	117.67	50.67	43.06%	PROPOSED DRIVEWAY
254	EUCALYPTUS GLOBULUS	66		HIGH	E.GLOBULUS>40<70CM DBH	197.06	22.24	11.29%	PROPOSED DRIVEWAY
255	EUCALYPTUS GLOBULUS	52		HIGH	E.GLOBULUS>40<70CM DBH	122.33	45.61	37.28%	PROPOSED DRIVEWAY
257	EUCALYPTUS GLOBULUS	31		NA (SEE RATIONALE)	E.GLOBULUS<40 DBH	43.47	17.95	41.29%	PROPOSED DRIVEWAY
266	EUCALYPTUS GLOBULUS	46		HIGH	E.GLOBULUS>40<70CM DBH	95.73	37.94	39.32%	PROPOSED DRIVEWAY
268	E. OBLIQUA	32		NA (SEE RATIONALE)	DRY FOREST, <70CM DBH	46.32	11.37	24.55%	PROPOSED DRIVEWAY
277	DEAD	40	STAG, EX-E. GLOBULUS	NA (SEE RATIONALE)	STAGS & STUMPS IMPORTANT FOR 40-SPOTTED PARDALOTE	72.38	23.97	33.12%	PROPOSED DRIVEWAY
278	DEAD	37	STUMP, 20M, UNKNOWN SPECIES	NA (SEE RATIONALE)	STAGS & STUMPS IMPORTANT FOR 40-SPOTTED PARDALOTE	61.93	20.32	32.81%	PROPOSED DRIVEWAY
282	EUCALYPTUS GLOBULUS	33		NA (SEE RATIONALE)	E.GLOBULUS<40 DBH	49.27	19.81	40.21%	PROPOSED DRIVEWAY
283	EUCALYPTUS GLOBULUS	47		HIGH	E.GLOBULUS>40<70CM DBH	99.93	15.07	15.08%	PROPOSED DRIVEWAY
289	EUCALYPTUS GLOBULUS	59		HIGH	E.GLOBULUS>40<70CM DBH	157.48	70.79	44.95%	PROPOSED DRIVEWAY
290	EUCALYPTUS GLOBULUS	64		HIGH	E.GLOBULUS>40<70CM DBH	185.3	79.28	42.78%	PROPOSED DRIVEWAY
294	DEAD	46	STUMP, 7M. EX-E. GLOBULUS	NA (SEE RATIONALE)	STAGS & STUMPS IMPORTANT FOR 40-SPOTTED PARDALOTE	95.73	45.7	47.74%	PROPOSED DRIVEWAY
300	EUCALYPTUS GLOBULUS	32		NA (SEE RATIONALE)	E.GLOBULUS<40 DBH	212.27	37.68	17.75%	PROPOSED DRIVEWAY
301	EUCALYPTUS GLOBULUS	51		HIGH	E.GLOBULUS>40<70CM DBH	117.67	25.48	21.65%	PROPOSED DRIVEWAY
310	E. PULCHELLA	61		HIGH	DRY FOREST, <70CM DBH	168.33	48.7	28.93%	PROPOSED DRIVEWAY
311	DEAD	28	STUMP, 2.5M, UNKNOWN SPECIES	NA (SEE RATIONALE)	STAGS & STUMPS IMPORTANT FOR 40-SPOTTED PARDALOTE	35.47	8.67	24.44%	PROPOSED DRIVEWAY
312	EUCALYPTUS GLOBULUS	103		VERY HIGH	DRY FOREST, ANY SPECIES >70CM DBH & E. GLOBULUS >70CM DBH	479.94	162.48	33.85%	PROPOSED DRIVEWAY
313	EUCALYPTUS GLOBULUS	83		VERY HIGH	DRY FOREST, ANY SPECIES >70CM DBH & E. GLOBULUS >70CM DBH	311.65	91.93	29.50%	PROPOSED DRIVEWAY
314	EUCALYPTUS GLOBULUS	58		HIGH	E.GLOBULUS>40<70CM DBH	152.18	32.35	21.26%	PROPOSED DRIVEWAY

Number of trees to be removed: 13
Number of trees with TPZ > 10%: 63

Total number of trees affected: 76

TREE MANAGEMENT PLAN STATEMENT

This statement aims to discuss tree management strategies we have implemented on the proposed site for the visitor's accommodation and inhabitable studio unit on 47 Youngs Road, Apollo Bay.

The management plan reflects a total of 76 trees being affected by the proposal, 13 to be removed and 63 with more than 10% of its tree protection zone (TPZ) affected. Amongst the 13 trees to be removed, **none** of them are of VERY HIGH status. Accordingly, out of the 63 trees that has their TPZ > 10%, only **SEVEN** (13, 67, 70, 103, 156, 312, 313) are of VERY HIGH status.

It is unavoidable that the trees (13, 67, 70, 103, 156, 312, 313) has to be affected as it is situated along the narrow entryway to the site. We have directed the driveway on the opposite edge of the entryway from the subjected trees to avoid having remove the tree entirely.

In order to mitigate this further, we are proposing the construction of the driveway with a methodology that will significantly reduce negative impact on the trees i.e. the use of Geoweb Cellular Confinement System (detailed below). This methodology has been developed and tested to protect the roots of the trees and rooting environment from affects of installing gravel trafficable surfaces. Further information of this method can be found in the attached document. Due to implementing this construction methodology, the trees shown >10% TPZ in the driveway zone will not be affected.

Also, the proposed visitor's accommodation and studio is designed to be entirely off-grid. Therefore, no power lines, NBN, and/or any other services will be impacting on the land.

Through these observations and our mitigation strategies, we can conclude that this location provides the **least environmental impact**.

DRIVEWAY DETAIL IN ROOT PROTECTION AREAS

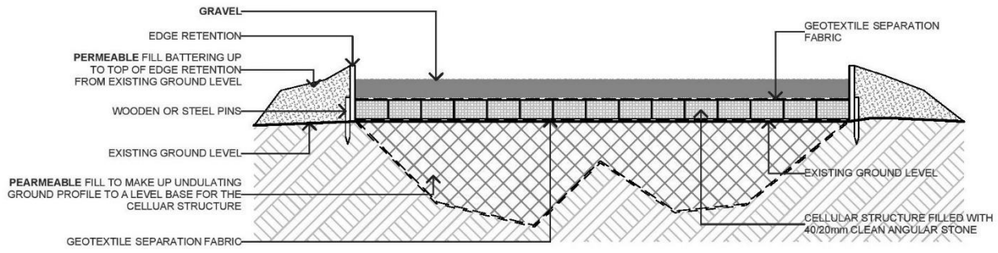

ILLUSTRATIVE SPECIFICATION FOR NO-DIG CELLULAR CONFINEMENT SURFACING WITH EXAMPLE OF GRAVEL FINISH OPTION
NOTE: THE FINAL DESIGN MUST BE SITE SPECIFIC AND DETAILED BY AN APPROPRIATE SPECIALIST

Figure 3 – Site-plan showing trees proposed for removal (cropped from page 9 of Architectural Plans by Room11 Architects, March 2023)

5. Nature conservation values of the site

5.1. Vegetation Communities

The site contains one native vegetation communities under the TASVEG4.0 classification system (see Natural Values Report by ECOTAS, July 2022).

Table 1 – Summary of vegetation communities and reservation status

VEGETATION COMMUNITY	TASVEG CODE (V4.0)	STATEWIDE STATUS*	BIODIVERSITY VALUE UNDER TABLE E10.1 OF THE SCHEME
Eucalyptus globulus dry forest and woodland	DGL	Threatened	High Priority

* Schedule 3A of the *Nature Conservation Act 2002*

5.2. Conservation status of the vegetation communities

DGL forest and woodland is a threatened vegetation community under Schedule 3A of the *Nature Conservation Act 2002*, is considered under-reserved at a State and bioregional level and is considered a high priority biodiversity value under Table E10.1 of the Scheme.

5.3. Flora and fauna species

The Natural Values Report by ECOTAS (July 2022) includes a preliminary plant list which identified forty-six (46) native plant species and two (2) common weed species.

No threatened species listed under the Tasmanian *Threatened Species Protection Act 1995* (TTSPA) or under the Commonwealth *Environmental Protection and Biodiversity Act 1999* (EPBCA) were recorded during the ECOTAS survey.

The property provides suitable habitat for a range of threatened flora and fauna species, but particularly for the critically endangered swift parrot (*Lathamus discolor*) and nationally vulnerable eastern quoll (*Dasyurus viverrinus*).

5.4. Mature Trees

The Scheme offers specific protection for individual trees that are or could be of high conservation value, as defined under a working definition. The Tree Plan in the Architectural Drawings submitted by the proponent is included here in Figures 2 -5 (Room 11 Architects, January 2023).

The Plan identifies:

- The species, diameter at breast height (DBH), and calculated tree protection zones (TPZs) for all trees on the subject land with a DBH of 250 mm or more located within 15 m of proposed infrastructure and within the proposed hazard management area (HMA),
- The conservation value of each of these trees pursuant to Council's working definition of a 'high conservation value tree',
- An indication as to which of these trees are to be removed and which are to be retained, and
- An indication as to which of the trees that are proposed to be retained will have an encroachment of 10% or more into their TPZs by proposed building and works.

Guidance to minimise any impacts on mature trees which are proposed to be retained but have an encroachment of 10% or more into their TPZs by proposed building and works is provided in:

- the Tree Management Plan Statement in Figure 5 on page 9 of this EMP (Room 11 Architects, January 2023), and
- the Arborist Recommendations in Appendix 1 of this EMP (Tree Pioneers, March 2023).

5.5. Introduced species

There is likely to be a range of benign exotic species present on the site in small numbers, including flat-weeds and exotic grasses, but these are unlikely to have any impact on natural values or require any active management effort.

Two declared weeds under the *Weed Management Act 1999*, were recorded on the property in the survey by ECOTAS (July 2022):

- ragwort (*Senecio jacobaea*) – single fertile specimen, and
- Spanish heath (*Erica lusitanica*) – widespread and locally dense.

The weed mapping from the ECOTAS report is included in Figure 4.

The more recent site visit to inform this report indicated a significant reduction in the distribution of Spanish heath since the time of the ECOTAS report, but individual plants and small localised populations of the species are still widespread across the site.

Figure 4 – Distribution of declared weeds on and around the subject land (ECOTAS, July 2022)

6. Impact of development on natural values

The entire site is occupied by a threatened forest community (DGL forest) and development cannot occur without some impact on this community, as well as some impact on individual mature trees within that community.

There are limited sites within the DGL forest on the property that are clear of high conservation value trees, are dominated by young regrowth, and/or are in a more degraded condition than is typical of the site. One of these sites has been chosen by the proponent for the visitor accommodation and associated outbuilding – an area of relatively young regrowth with few high conservation value trees in the vicinity.

Because the chosen site is close to the coast, a relatively long access is required. The relatively open nature of the forest on the site lends itself to a winding access that avoids, where possible, the need to remove mature trees. The proponent has invested considerable time and effort in designing the access to avoid or minimise any impacts on mature trees in construction of the proposed access.

The proposed building has been assessed by the Bushfire Consultant Justin Cashion of GPM (BFP 112) as a Class 1b building. This building class triggers a requirement for additional bushfire hazard responses under Table 4.4 Element D of the Director's Determination, which has resulted in BAL 12.5 separation distances being prescribed to the west, north and east. The reduced risk from the south associated with a narrow strip of forest in the coastal reserve has allowed for a BAL-29 separation in this direction, ie the coastal location allows for a smaller overall HMA than the bushfire consultant would otherwise have been able to prescribe.

The prescribed HMA contains the proposed buildings, the proposed wastewater treatment area, and the proposed parking/turning area at the end of the property access. The overall development footprint is approximately 5,415 m^2, with the main body of the HMA contributing approximately 3,833 m^2 and the property access outside the HMA contributing approximately 1,567 m^2 (Figure 5).

The impacts of the proposal on mature trees are illustrated in the Tree Plan that forms part of the Architectural Drawings by Room 11 Architects (January 2023), which is included as Figure 2 and Figure 3 of this EMP.

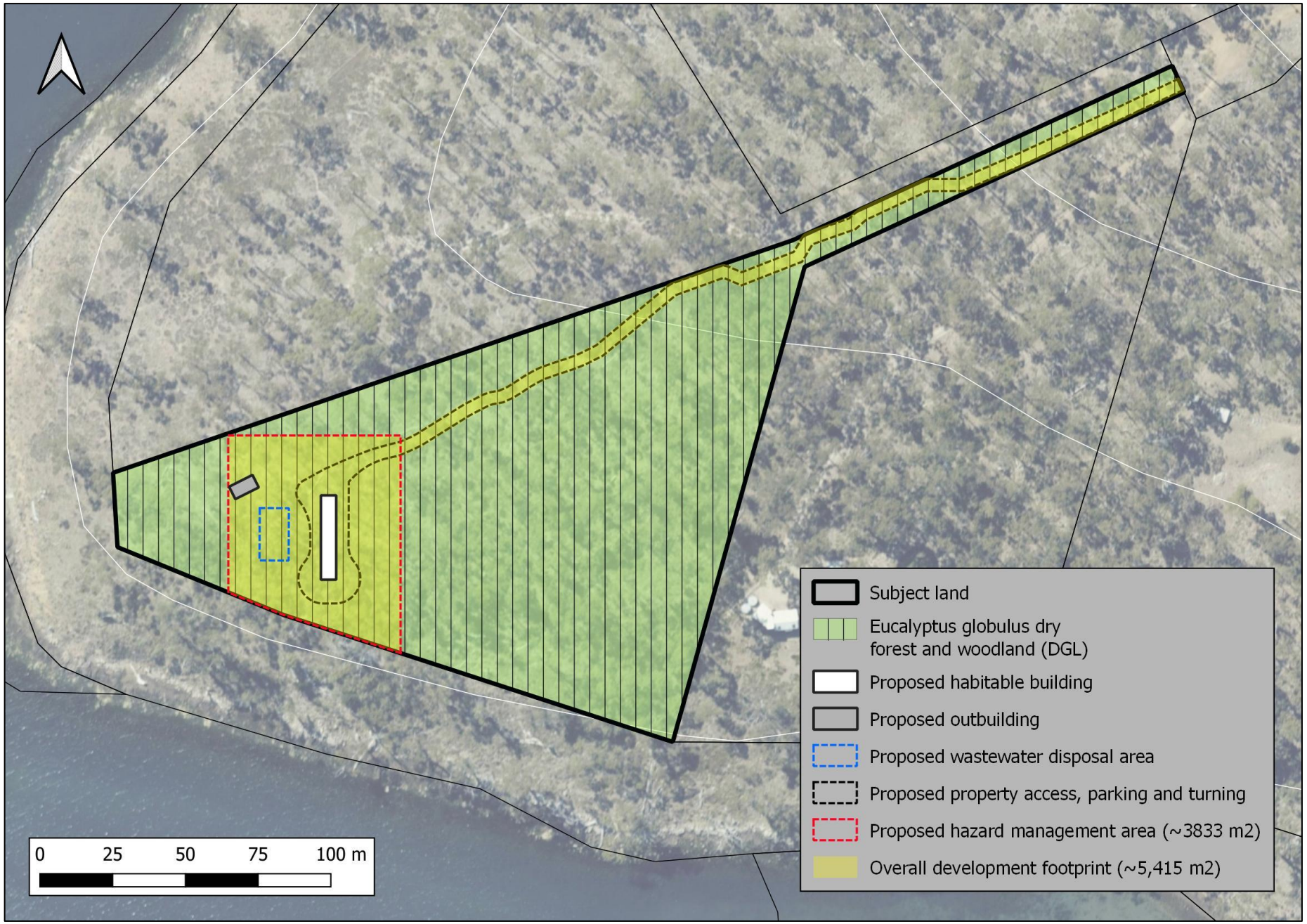

Figure 5 – Map illustrating overall impact of proposed development on DGL forest

7. Management objectives for the site

The native vegetation on the site is generally in excellent condition. Its conservation contributes to a relatively large area of healthy and diverse native vegetation and fauna habitat in the Apollo Bay area, including significant habitat for threatened species.

The following management objectives are proposed for the native vegetation on the property:

- protect and conserve the natural systems and features including the diversity of species, habitats and communities,
- protect habitat and potential habitat for threatened fauna species,
- protect the natural values of the site from damage by introduced plants and animals, disease or inappropriate management regimes,
- maintain or improve the structure of the forest and allow for regeneration of native species,
- prevent the forest stand from being frequently burnt, and
- eradicate or control weeds and feral animals and prevent any further introduction(s) of exotic species.

8. Management prescriptions

8.1. Clearing of Vegetation

No clearing of vegetation (including shrubs and other understorey species) should occur within the native vegetation on the property unless for the following purposes:

- clearance required for fire hazard management purposes under a certified Bushfire Hazard Management Plan,
- clearance required by the Tasmania Fire Service (TFS) or Kingborough Council for fire abatement,
- emergency clearance for fire-fighting operations such as firebreaks and back burns, as directed by the TFS or their authorised delegates,
- removal of environmental weeds,
- clearance essential for construction, maintenance or upgrade of property access and boundary fences, and

- clearance essential for the conduct of works approved under a valid planning permit from Kingborough Council.

8.2. Protection of mature trees

The owners must use their best endeavours to retain in good health all the trees identified to be retained on the Tree Plan that forms part of the updated Architectural Drawings by Room11 Architects (March 2023), which is included as Figure 4 on Page 6 of this EMP.

To minimise any impacts on mature trees which are proposed to be retained but have an encroachment of 10% or more into their TPZs by proposed building and works, the owners/developers must abide by the guidance contained in:

- the Tree Management Plan Statement in Figure 3 on page 7 of this EMP (Room 11 Architects, March 2023), and
- the Arborist Recommendations in Appendix 1 of this EMP (Tree Pioneers, March 2023)

8.3. Domestic Firewood

The property is not large enough to sustainably support firewood harvest. Collection of timber for firewood should be limited to incidental use of material that needs to be removed for approved management activities, or because it poses a threat to life or property (eg fallen timber removed from tracks or fence-lines).

8.4. Fencing

Where possible, vegetation clearance for establishment and maintenance of boundary fences should be limited to 1.5 m either side of the fence-line. Every effort should be made to avoid removal or damage to any mature, hollow-bearing trees.

8.5. Weed Control

As described above, only two declared weed species were recorded from the property during the recent natural values survey (ECOTAS, July 2022), but there are several other highly invasive environmental weeds that occur on Bruny Island that could easily be introduced by vehicle traffic and establish on the property. In the context of this property, the following species have been identified as priorities for monitoring efforts:

- Spanish heath (*Erica lusitanica*), which is already present at the site,
- Ragwort (*Senecio jacobaea*), which is already present at the site,
- broom species (*Cytisus spp*.),

- and Monterey pine (*Pinus radiata*). *
    - * there is a young radiata pine wildling in the coastal reserve adjoining the southwestern boundary of the subject land.

Weed management actions required to avoid the introduction or spread of environmental weeds are outlined in Appendix 3. In summary, the owners should continually monitor the property for the emergence of any declared or environmental weeds and any existing plants/infestations should be treated promptly to prevent establishment or spread.

The following broad requirements apply to future weed control actions:

- the owner must undertake weed management actions as prescribed in Appendix 3,
- only approved herbicides that are recommended for the control of a target species are to be applied and the owners must apply and dispose of herbicides in accordance with the manufacturer's recommendations, and
- any plant debris that contains seeds should be piled and burnt (subject to required permits) or bagged up and disposed of at an approved waste management facility.

8.6. Herbicides, other chemicals and fertilisers

No fertilisers should be applied within the native vegetation on the property.

No chemicals or herbicides should be applied within the native vegetation unless it is part of weed eradication efforts.

Any use of fertilisers, herbicides and chemicals for normal management within the managed land on the property should follow label instructuions and care should be taken to avoid any indirect impacts on native vegetation.

8.7. Preventing the introduction of weeds or disease

Weeds and fungal diseases such as root-rot pathogen (*Phytophthora cinnamomi*) and Chytrid frog disease (*Batrachochytrium dendrobatidis*) can easily be transported between sites on boots, equipment, vehicle tyres, introduced soil or other foreign materials.

Development works or other physical disturbance could potentially introduce weeds or disease, or promote the spread of existing weeds. This risk can be minimised through appropriate vehicle and equipment hygiene and management controls:

- all contractors engaged in development works should be required to thoroughly wash-down vehicles and equipment before coming on-site and after leaving the site,

- wherever possible, vehicles, equipment and materials should not be parked or stored within areas of native vegetation to be retained post-development, and
- during and post-development, any areas of soil disturbance or introduced foreign materials (eg soil, compost or mulch) should be monitored regularly by the owners for the presence of any environmental weeds and any infestations should be treated as soon as practicable after discovery.

8.8. Fire

Fire(s) should be excluded from native vegetation on the property unless:

- required by the Tasmania Fire Service (TFS) for emergency purposes (eg back-burning), as directed by the TFS or their authorised delegates,
- required by the Tasmania Fire Service (TFS) for fire hazard reduction, and the prior written consent of Council has been obtained,
- for ecological purposes (eg the maintenance of biodiversity) in accordance with written advice from a qualified fire ecologist, or
- when uncontrolled bushfire cannot be prevented from passing through the site.

8.9. Managing swift parrot collision risk

The DGL forest on the property provides potentially significant foraging habitat for the critically endangered swift parrot (*Lathamus discolor*). This species flys at high speed and is susceptible to collisions with windows and other artificial structures that are not readily visible to the parrots in flight.

The proponents should familiarise themselves with the guidance provided in Minimising the Swift Parrot Collision Threat: Guidelines and Recommendations for Parrot-safe Building Design (WWF 2008). Construction of the proposed habitable building and outbuilding must be in accordance with the recommendations in the Natural Values Report by ECOTAS (July, 2022) and as requested by Council in the RAI dated 5 December 2022:

- avoid a design and glazing features which creat sightlines through buildings (either from one side of a structure to another or across square-joined glazing at corners of buildings), and
- ensure glazed surfaces do not have a total surface area of greater than 2 m^2 OR glazed surfaces are somehow treated to include permanent visual markers or muted reflections, the purpose of which must give them the appearance of an impenetrable surface - such surfaces may include any one of the following types of treatments:

    - the use of low-reflectivity glass (0-10%),
    - films, coatings, fritted glass or permanent screens), OR
    - installing glazed surfaces at a minimum of 20 degrees from vertical, angled in at its base to reflect the ground,
- all windows with a glazed area greater than 2 m^2 must be glazed with GL02.

8.10. Protection of watercourses

There are no watercourses within 100 m of the subject land.

8.11. Deliberate introduction of exotic (non-native) flora or fauna

No exotic species should be deliberately introduced into native vegetation on the property unless approved by the General Manager of Kingborough Council (for example, as part of a rehabilitation, restoration or translocation strategy).

No stock should be deliberately introduced into the native vegetation on the property and domestic pets should only enter intact native vegetation if they are under the ‘effective control‘ of their owners at all times.

8.12. Recreational Use

Low impact recreational activities that are not considered deleterious to the values of the site (eg walking and bird watching) can be carried out within native vegetation on the property without impacting natural values.

The development of walking trails within native vegetation would not significantly impact natural values provided trails are routed so as to avoid impacts to large trees or any other significant/sensitive features that might be identified in future. New trails should be a maximum of 1.5 m wide and should only be hardened if required in poorly drained areas.

8.13. Vehicle Use

Vehicle use in native vegetation on the property should be restricted to the following:

- for emergency fire-fighting operations,
- where essential for management activities such as weed control and boundary fencing, and
- where essential for the conduct of works approved under a valid planning permit from Kingborough Council.

8.14. Deleterious Activities Generally

No activities which may be considered deleterious to the natural values on the property (including but not confined to the removal of soil, gravel or other natural resources) should be carried out within native vegetation on the property unless approved by the General Manager of Kingborough Council.

8.15. Monitoring and Maintenance

The site is to be monitored, at the cost of the Owner, for the emergence of declared weed species (as listed under the *Weed Management Act 1999*) and environmental weed species or other issues detrimental to the site. Monitoring is to be undertaken annually by the Owner or an appointed representative (see Appendix 3).

If any declared weeds or environmental weeds are recorded during monitoring, they must be treated promptly to prevent establishment or spread.

9. Summary and Conclusions

Kingborough Council have requested that this EMP be prepared for the proposed development at 47 Youngs Road, Apollo Bay (DA-2022-473).

This EMP contains management prescriptions that should preserve areas of native vegetation, mature trees and associated habitat on the property in good condition and minimise any future impacts of occupation and use on natural values.

10. References

ECOTAS (July 2022). Natural Values Assessment of 47 Youngs Road, Apollo Bay, Bruny Island, Tasmania.

GPM (March 2023). Bush Fire Risk Assessment Report New Class 1b Visitor Accommodation 47 Youngs Road – Apollo Bay – Bruny Island.

Room 11 Architects (March 2023). Architectural Drawings - Chroma Tunnel - 47 Youngs Road, Apollo Bay.

Kingborough Council (5 December 2022 and 16 March 2023). Requests for additional information in respect of DA-2022-473.

KIPS 2015. Kingborough Interim Planning Scheme 2015.

https://www.iplan.tas.gov.au/pages/plan/book.aspx?exhibit=kips

DNRE Tasmania (2023). Weeds Index – Declared Weeds.

https://nre.tas.gov.au/invasive-species/weeds/weeds-index/declared-weeds-index

theLIST 2022. LISTMAP Land Information System Tasmania, Tasmania Government.

https://maps.thelist.tas.gov.au/listmap/app/list/map

Tree Pioneers (March 2023). Arborist Tree Maintenance Report, 47 Youngs Road, Apollo Bay., Bruny Island, Tas.

7. Conclusion/Recommendations

Temporary Tree Protection Measures

Listed below are protection measures to be implemented, prior, during and can be removed after all works are complete.

- Installation of TPZ fences. Figure 9 shows a typical TPZ fence. This method is not practical on this site and a strained wire fence with orange bunting will be acceptable. Erecting individual TPZ fencing will not be practical therefore a stained wire fence with bunting at the edge of the driveway and edge of the above grade site surface will be acceptable.
- Installation of trunk protection around trees in close proximity to dwelling to protect damage to the trunk. Trees 16, 35, 37, 53, 54, 55, 56, 64, 65, 70, 71 and 109. Examples of trunk protection shown in Figure 10. Imaged sourced from the Australian Standard for Protection of Trees on the Development site. Alternatively, a plywood box/fence in close proximity to the trunk.
- Tree protection zone sign erected along TPZ fences and Trunk protection to ensure no access to area.
- Inspection by site arborist to 'sign off' Tree Protection measures implementation.
- Any issues to be discussed with site arborist.
- No machinery to level or excavate in the TPZ.
- No dumping or storage of materials for driveway in TPZ.
- During the construction of the driveway, the TPZ should be maintained. It is important to respect the protection of trees.
- Appoint a site arborist to oversee works in the TPZ.

Construction

Listed below are the procedures for building onsite for the protection of the trees.

- Access to the site has not been established. Entrance to site will need to be installed above grade. This surface will need to be semi permeable to allow for water and nutrients to filter through.
- Construction of driveway to be completed with large, crushed rock to a depth of 200mm then smaller crushed rock to finish the surface. Ballast rock which is used on railway is a good base layer. This driveway construction is used in the neighboring properties. Evidence of this construction method and its success is present.
- Alternative methods of driveway construction can be used which have the same affect.
- Driveway installation needs to be completed before any works on the building. Machines and materials will need to access the site through the trees TPZ. This will not be possible till driveway is constructed.
- During the construction of the driveway, the TPZ should be maintained. It is important to respect the protection of trees.
- Any removal or pruning works to be undertaken by a suitable qualified person with a minimum of a Certificate 3 in Arboriculture.
- Removal of trees to take place before driveway installation and to be done by hand. Climbing and dismantling is recommended to avoid and damage to neighbor trees. Debris stacked to the side of proposed driveway to be processed after installation.

Request for Further Information

Below is a response to the specific trees requested by the RFI

- All trees assessed on site with an encroachment >10% and a construction method recommended for trees to remain viable. Specific trees 35, 109, 112 and 113 were assessed and will be built around by sensitive construction methods. Tree 118 is outside the property and will not be encroached on.
- No trees require removal that are located on external land. There are a few trees from external land that have encroachment. These trees will have a sensitive construction method implemented to ensure viability.

8. Tree Protection

Tree Protection Zones (TPZ)

The specific area set aside above ground at a given distance from the trunk set aside for the protection of the tree's roots and crown to provide for the viability and stability of a tree to be retained where it is potentially subject to damage by development.

Structural Root Zones (SRZ)

The area around the base of a tree required for the tree's stability in the ground. The woody root growth and soil cohesion in this area are necessary to hold the tree upright. The SRZ is nominally circular with the trunk at its centre and is expressed by its radius in meters. This zone considers the trees structural stability only, not the root zone required for a tree's vigour and long-term viability, which will usually be much larger area.

Development sites

Development sites incorporating trees need to implement protection measures to ensure the tree remains viable in the future landscape. Damage to trees during development can occur directly to the tree and indirectly to it through its environment.

- Direct damage includes mechanical injury to the trunk, severing roots, or alterations to the soil environment in the immediate vicinity of the roots. This included compactions or loss of organic matter.
- Indirect damage includes soil moisture alterations, changes in water tables and drainage patterns.

On development site, the protection of trees is achieved with a TPZ (Tree Protection Zone). TPZ are calculated according to *AS 4970-2009 Protections of amenity trees on development sites*. TPZ are 12 times the trunk diameter at 1.4m above ground level. Once the TPZ has been calculated, at TPZ fence is erected to protect the tree and its environment. This Fences must be erected before any work takes place.

Guidelines for TPZ's (Tree Protection Zones):

- No building structures or hard landscape features.
- No building material storage.
- No excavation or soil disturbance work
- No placing of fill.
- No lighting of fire or preparing of chemicals.
- No vehicles or pedestrian access.

TPZ requirements:

- Erect signs along the entire length of the protective fence.
- Construct TPZ to prevent pedestrian and vehicle access.
- Mulch TPZ area to a depth of 100mm with wood chips.
- Irrigate the TPZ periodically, as determined by the arborist.

TPZ Guidelines and requirements need to be adhere to at all stages of the design and development process.

Encroachment

In some case, encroachment into the TPZ is necessary. By working within the Australian standards framework, there are provisions for encroachment. Encroachment is categories as minor or major.

Minor Encroachment AS 4970-2009

Minor encroachment is less than 10% of the TPZ and doesn't enter the SRZ (Structural Root Zone). Root investigation is required and the 10% must be compensated with an extension to the TPZ elsewhere. These TPZ encroachments must be supervised by the project arborist.

Major Encroachments AS 4970-2009

Major encroachment is more than 10% of the TPZ and into the SRZ. These encroachments must be supervised by the project arborist. The project arborist must demonstrate that the trees will remain viable. The area lost to encroachment must be compensated with an extension to the TPA elsewhere.

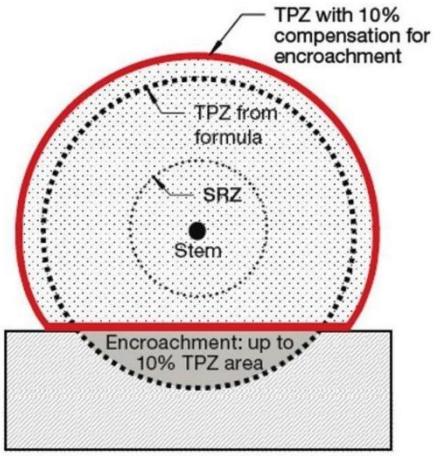

: Example of TPZ encroachment and compensatory offset (image from AS 4970-2009)

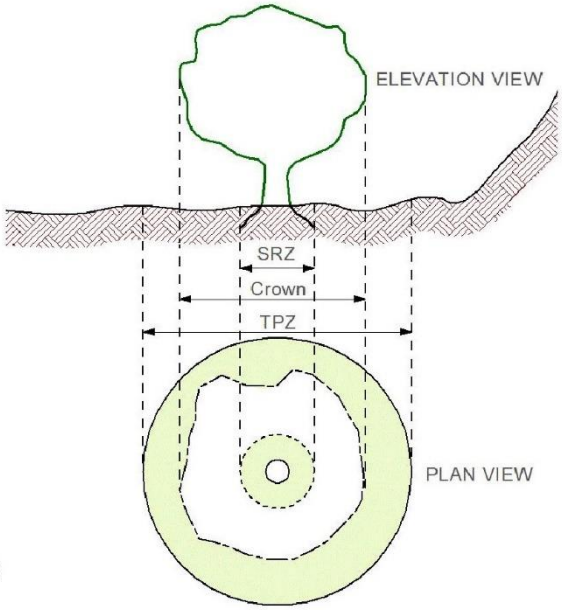

Figure 7. Example of compensation for TPZ

Figure 8. Alternate views of TPZ

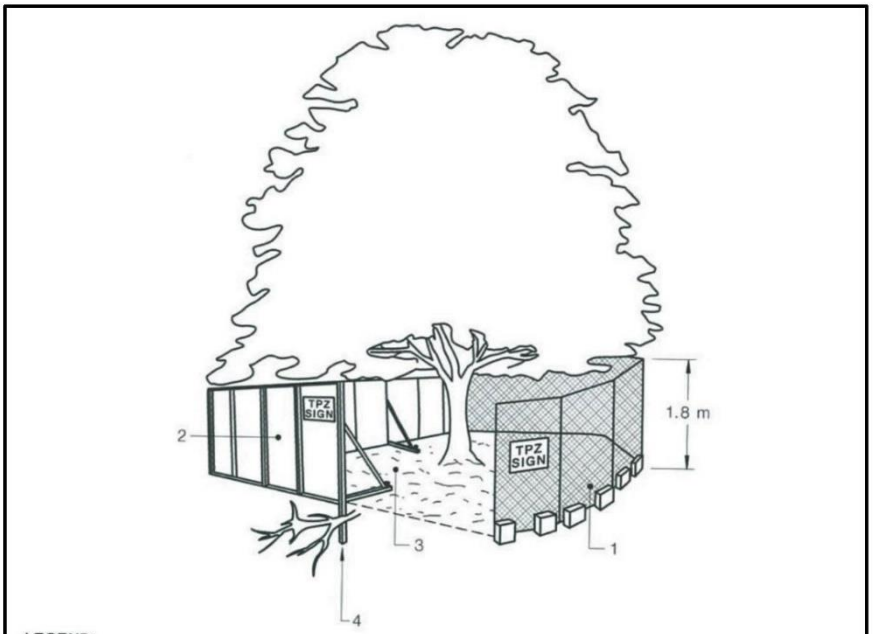

LEGEND:
1 Chain wire mesh panels with shade cloth (if required) attached, held in place with concrete feet.
2 Alternative plywood or wooden paling fence panels. This fencing material also prevents building materials or soil entering the TPZ.
3 Mulch installation across surface of TPZ (at the discretion of the project arborist). No excavation, construction activity, grade changes, surface treatment or storage of materials of any kind is permitted within the TPZ.
4 Bracing is permissible within the TPZ. Installation of supports should avoid damaging roots.

Figure 9. Tree Protection Fence and signs. Imaged sourced from the Australian Standard for Protection of Trees on the Development site.

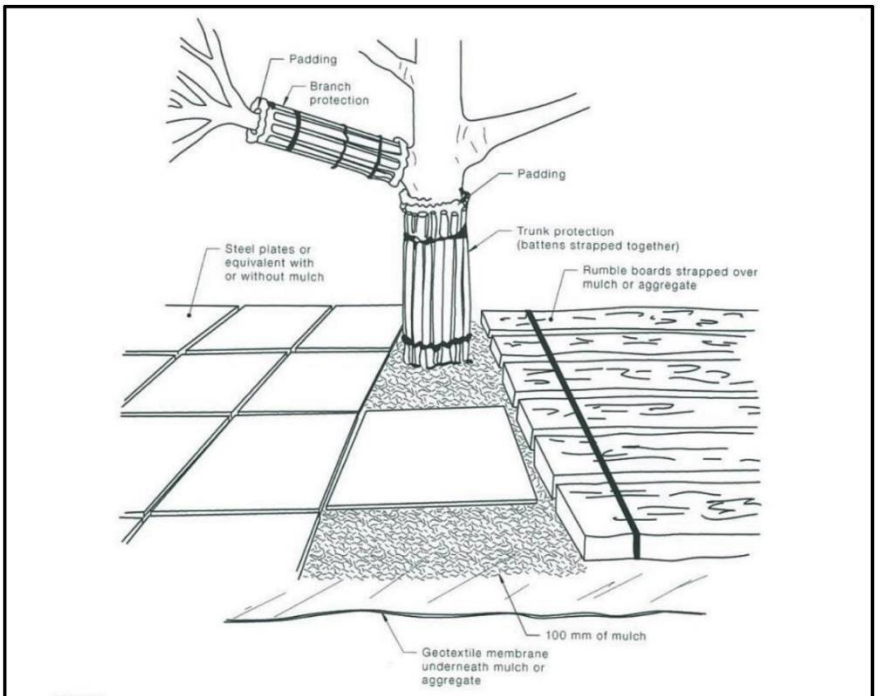

NOTES:

1 For trunk and branch protection use boards and padding that will prevent damage to bark. Boards are to be strapped to trees, not nailed or screwed.

2 Rumble boards should be of a suitable thickness to prevent soil compaction and root damage.

Figure 10. Trunk Protection and ground protection. Imaged sourced from the Australian Standard for Protection of Trees on the Development site.

A TPZ sign provides clear and readily accessible information to indicate that a TPZ has been established. Figure C1 provides an example of a suitable sign.

Figure 11. Tree Protection Zone Sign. Imaged sourced from the Australian Standard for Protection of Trees on the Development site.

Appendix 2 Summary of weed control measures.

WEED SPECIES	ACTION	METHODOLOGY/*	OUTCOME	TIMING	PRIORITY
Spanish Heath and Ragwort	Conduct annual inspection of site to locate any plants	Survey the whole site to locate any plants, concentrating on areas of previous infestations, and control using 'cut and paint' method**, or hand pull when soil is moist	Existing declared and environmental weeds prevented from spreading on the site	Annually in Spring	High
Broom species	Conduct annual inspection of site to locate any plants	Survey the whole site to locate any plants, concentrating on areas of vehicle traffic, and control by hand pulling small plants when soil is moist, or using 'cut and paint' method**	Environmental weeds prevented from establishing and spreading on the site	Annually in Spring	Medium
Monterey pine	Control recorded individual tree	Survey site as convenient. Control small plants or saplings by cutting off at the base (they will not coppice).	Environmental weeds prevented from establishing and spreading on the site	Annually	Medium

* For detailed advice on the control and management of Spanish heath, ragwort and broom see:

https://nre.tas.gov.au/invasive-species/weeds/weeds-index/declared-weeds-index/erica

https://nre.tas.gov.au/invasive-species/weeds/weeds-index/declared-weeds-index/ragwort

https://nre.tas.gov.au/invasive-species/weeds/weeds-index/declared-weeds-index/broom

** The 'cut & paint' control method is the best technique for large or woody weeds. Cut all stems as close to the ground as possible with secateurs, loppers or a saw, depending on the size of the plant. A horizontal cut is preferable because it prevents runoff of herbicide. Apply undiluted glyphosate to the entire exposed surface of all cut stems within 20 seconds using a brush, foam applicator or spray bottle. Always wear protective clothing - long pants and sleeves, boots, gloves and eye protection.